KOHLER. Faucets

Stillness®

Rite-Temp® Valve Trim

K-TS950-4

Features

- Includes face plate with handle.
- Single handle controls both on/off activation and temperature setting.
- Supplied with ADA compliant metal lever handle.
- Complements the Stillness faucet and accessory collections.

Material

- Premium material construction with metal handle ensures reliability and durability.
- KOHLER finishes resist corrosion and tarnishing, exceeding industry durability standards.

Installation

- Trim set requires valve to complete installation.

Required Products/Accessories

K-304/K-P304 Series Rite-Temp® Valves
or
K-304/K-P304 Series Rite-Temp® Valves
or
K-304/K-P304 Series Rite-Temp® Valves
or
K-304/K-P304 Series Rite-Temp® Valves
or
K-304/K-P304 Series Rite-Temp® Valves
or
K-304/K-P304 Series Rite-Temp® Valves
or
K-304/K-P304 Series Rite-Temp® Valves
or
K-304/K-P304 Series Rite-Temp® Valves
or
K-304/K-P304 Series Rite-Temp® Valves
or
K-304/K-P304 Series Rite-Temp® Valves
or
K-304/K-P304 Series Rite-Temp® Valves
or
K-304/K-P304 Series Rite-Temp® Valves
or
K-304/K-P304 Series Rite-Temp® Valves
or
K-304/K-P304 Series Rite-Temp® Valves
or
K-8304/K-P8304 Series Rite-Temp® Valve & Cartridge Kits

ADA	CSA B651	OBC

Codes/Standards

ASME A112.18.1/CSA B125.1
ADA
ICC/ANSI A117.1
CSA B651
OBC

KOHLER® Faucet Lifetime Limited Warranty

See website for detailed warranty information.

Available Colors/Finishes

Color tiles intended for reference only.

Color	Code	Description
	CP	Polished Chrome
	BN	Vibrant® Brushed Nickel

KOHLER. Faucets

Stillness®

Rite-Temp® Valve Trim

K-TS950-4

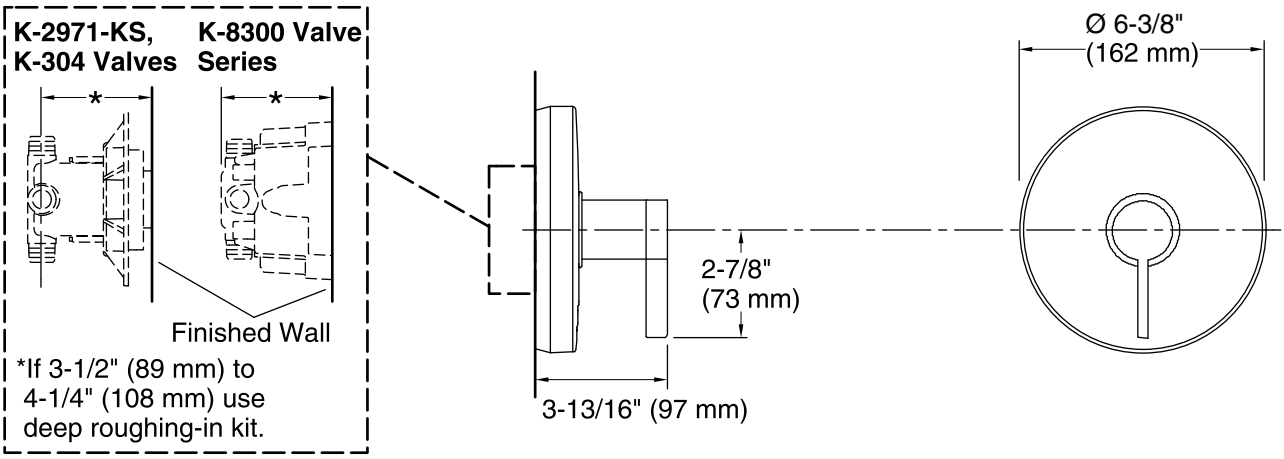

Technical Information

All product dimensions are nominal.

Notes

Install the product according to the installation guide.

NOTICE: Risk of product damage. Long screws for installing trim can damage the K-2971-KS valve. Consult the trim installation guide to verify if the thin wall installation kit (88526) is needed.

ADA, OBC, CSA B651 compliant when installed to the specific requirements of these regulations.