KOHLER Faucets

Bellera®

Pull-down kitchen sink faucet with three-function sprayhead

K-560

Features

- Three-function pull-down sprayhead with touch-control allows you to switch between stream, Sweep® spray and Boost technology
- Boost technology increases the flow rate by 30% with the press of a button
- Sweep® spray creates a wide, forceful blade of water for superior cleaning
- KOHLER® ceramic disc valves exceed industry longevity standards for a lifetime of durable performance
- ProMotion® technology's light, quiet braided hose and swiveling ball joint make the pull-down sprayhead easier and more comfortable to use
- MasterClean™ sprayface features an easy-to-clean surface that withstands mineral buildup and maximizes spray performance
- High-arch spout offers superior clearance for filling pots and cleaning
- Single handle is simple to use and makes adjusting water temperature easy
- Temperature memory allows faucet to be turned on and off at the temperature set during prior usage
- 1.5 gpm (5.7 lpm) maximum flow rate at 60 psi (4.14 bar)
- DockNetik® secure docking system locks sprayhead into place when not in use

Material

- Premium metal construction for durability and reliability
- KOHLER finishes resist corrosion and tarnishing

Installation

- For single-hole or three-hole installation (escutcheon plate included)
- Flexible supply lines and installation ring simplify installation

Adapters, Rough-in and Extension Kits

1012715	Range: 1-3/8" (34 mm) - 3-3/8" (85 mm)

Optional Products/Accessories

1167289 1.5 GPM [5.7 l/min] Low Flow Kit
1167290 2.2 GPM (8.3 l/min) Low Flow Kit

ADA | **CSA B651**

Codes/Standards

ASME A112.18.1/CSA B125.1
ASME A112.18.3
NSF/ANSI/CAN 61
NSF/ANSI/CAN 372
DOE - Energy Policy Act 1992
California Energy Commission (CEC)
ADA
ICC/ANSI A117.1
CSA B651
NOM Standards
NOM 012-CONAGUA

KOHLER® Faucet Lifetime Limited Warranty

See website for detailed warranty information.

Available Colors/Finishes

Color tiles intended for reference only.

Color	Code	Description
	CP	Polished Chrome
	VS	Vibrant® Stainless

KOHLER Faucets

Bellera®

Pull-down kitchen sink faucet with three-function sprayhead

K-560

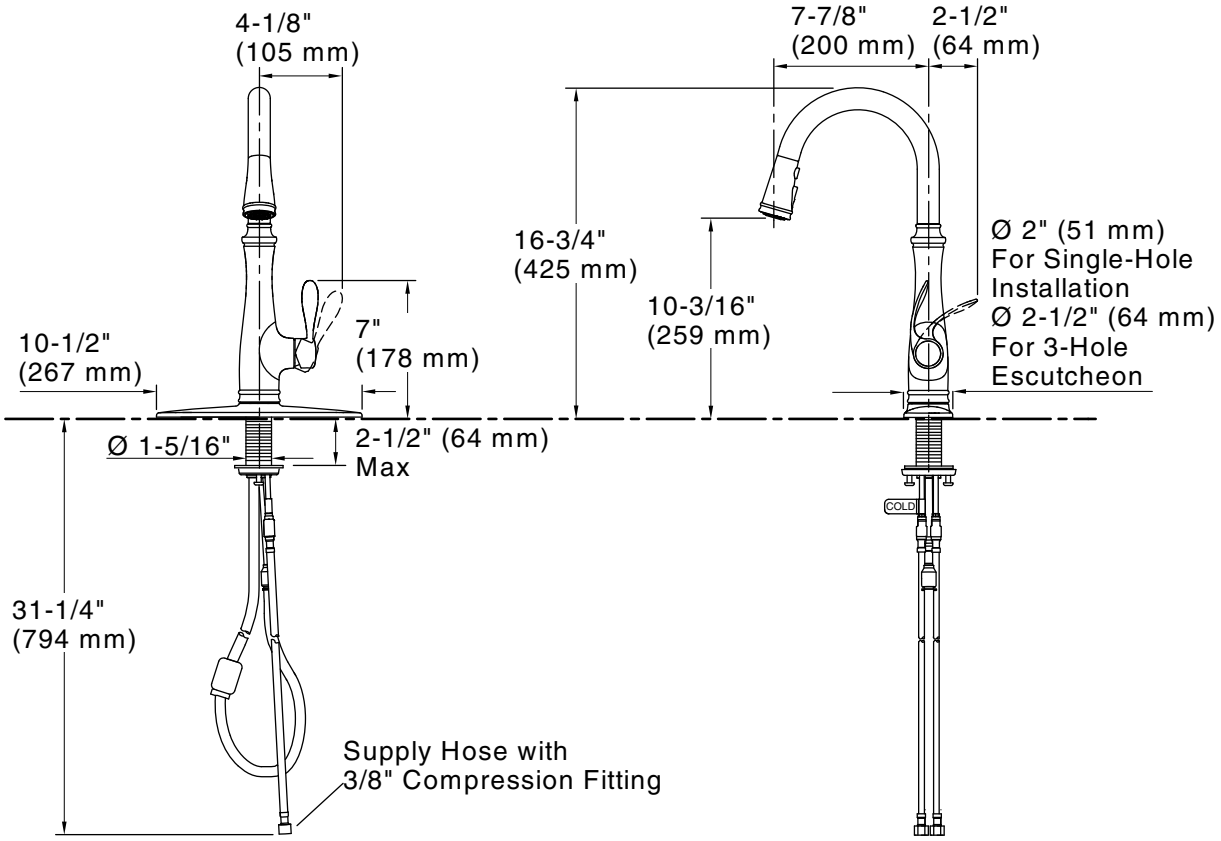

Technical Information

All product dimensions are nominal.

Faucet flow rate: 1.5 gal/min (5.7 l/min)

Spout:

Spout reach: 7-7/8" (200 mm)

Notes

Install this product according to the installation guide.

ADA complaint for faucet handles only.

ADA compliant for faucet handles only

ADA, CSA B651 compliant when installed to the specific requirements of these regulations.