KOHLER. Faucets

Purist®

Semi-professional kitchen sink faucet with three-function sprayhead

K-24982

Features

- Professional-style faucet with an easy-to-clean coated hose and removable coil
- Unique three-function sprayhead with Sweep® spray, Boost technology and aerated stream
- Handle rotates 90° forward to prevent contact with backsplash
- Sweep® spray creates a wide, forceful blade of water for superior cleaning
- Boost technology increases the flow rate by 30% with the press of a button
- DockNetik® magnetic docking system securely locks sprayhead into place when not in use
- MasterClean™ sprayface features an easy-to-clean surface that withstands mineral buildup
- Single lever handle is simple to use and makes adjusting water temperature easy
- Temperature memory allows faucet to be turned on and off at the temperature set during prior usage
- KOHLER ceramic disc valves exceed industry longevity standards for a lifetime of durable performance
- 1.5 gpm (5.7 lpm) maximum flow rate at 60 psi (4.14 bar)

Material

- Premium metal construction for durability and reliability
- KOHLER finishes resist corrosion and tarnishing

Installation

- Single hole
- Flexible supply lines simplify installation

Adapters, Rough-in and Extension Kits

1327990	Range: 2-1/2" (64 mm) - 4-5/8" (117 mm)

Recommended Products/Accessories

K-23723 Faucet cleaner

ADA | **CSA B651**

Codes/Standards

ASME A112.18.1/CSA B125.1
NSF/ANSI/CAN 61
NSF/ANSI/CAN 372
All applicable US Federal and State material regulations
DOE - Energy Policy Act 1992
California Energy Commission (CEC)
ADA
ICC/ANSI A117.1
CSA B651

KOHLER® Faucet Lifetime Limited Warranty

See website for detailed warranty information.

Available Colors/Finishes

Color tiles intended for reference only.

Color	Code	Description
	CP	Polished Chrome
	SN	Vibrant® Polished Nickel
	VS	Vibrant® Stainless
	BL	Matte Black
	2MB	Vibrant® Brushed Moderne Brass

KOHLER Faucets

Purist®

Semi-professional kitchen sink faucet with three-function sprayhead

K-24982

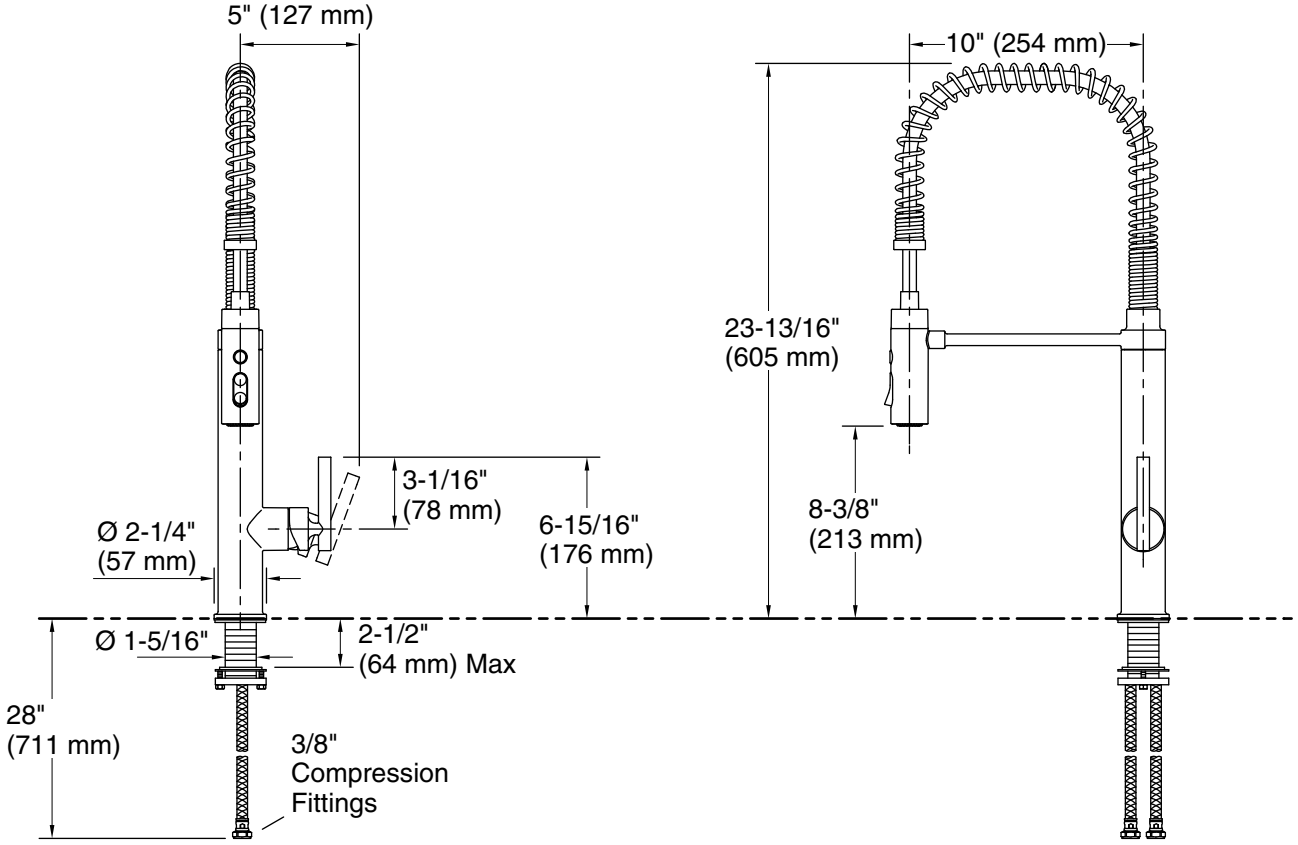

Technical Information

All product dimensions are nominal.

Notes

Install this product according to the installation instructions.

ADA complaint for faucet handles only.

ADA, CSA B651 compliant when installed to the specific requirements of these regulations.