KOHLER GENUINE PARTS

Stance®

Deck-mount bath faucet with lever handle
K-14775-4-CP

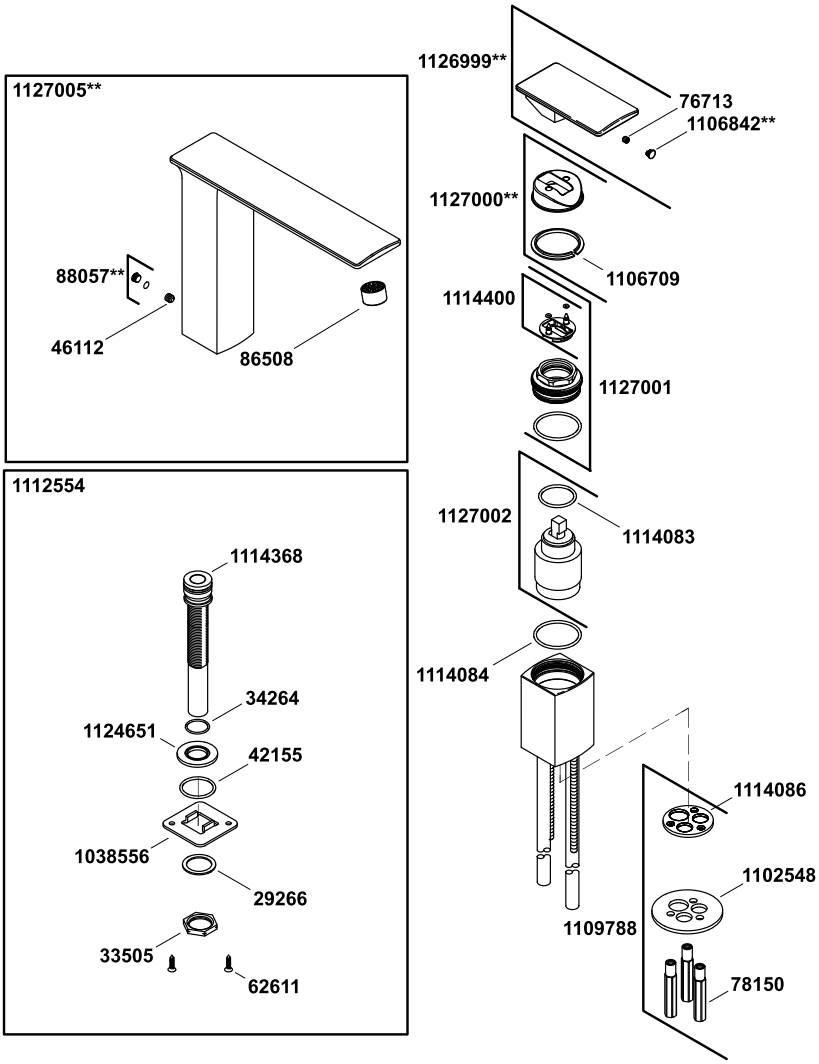

1139785-8-**B**

© 2013 Kohler Co.